GEFRAN

PY2

RECTILINEAR DISPLACEMENT TRANSDUCER WITH BALL TIP

CE

Principal characteristics

- *The side connection creates a through-rod structure with double rod support, guaranteeing greater overall strength of the transducer.*
- *The return spring automatically returns the rod to zero position, making the transducer suitable for comparator applications.*
- *The tip with stainless steel ball is suitable for applications where the object to be measured is not subject to shifts transverse to the transducer axle.*
- *Ideal for checking the flatness or thickness of panels of various materials. Can also be used for valves or mechanical parts when the rod cannot be attached to the moving object.*

TECHNICAL DATA

Useful electrical stroke (C.E.U.)	10/25/50/75/100
Resolution	Infinite
Independent linearity (within C.E.U.)	see table
Displacement speed	≤ 10 m/s
Displacement force	≤ 4N
Life	>25x10^{6}m strokes,or 100x10^6 operations, whichever is less (within C.E.U.)
Vibrations	5...2000Hz, Amax =0,75 mm amax. = 20 g
Shock	50 g, 11ms.
Tolerance on resistance	± 20%
Recommended cursor current	< 0,1 µA
Maximum cursor current	10mA
Maximum applicable voltage	see table
Electrical isolation	>100MΩ at 500V=, 1bar, 2s
Dielectric strength	< 100 µA at 500V~, 50Hz, 2s, 1bar
Dissipation at 40°C (0W at 120°C)	see table
Actual Temperature Coefficient of the output voltage	< 1,5ppm/°C
Working temperature	-30...+100°C
Storage temperature	-50...+120°C
Case material	Anodised aluminium Nylon 66 G 25
Control rod material	Stainless steel AISI 303
Fixing	Brackets with variable longitudinal axis

MECHANICAL DIMENSIONS

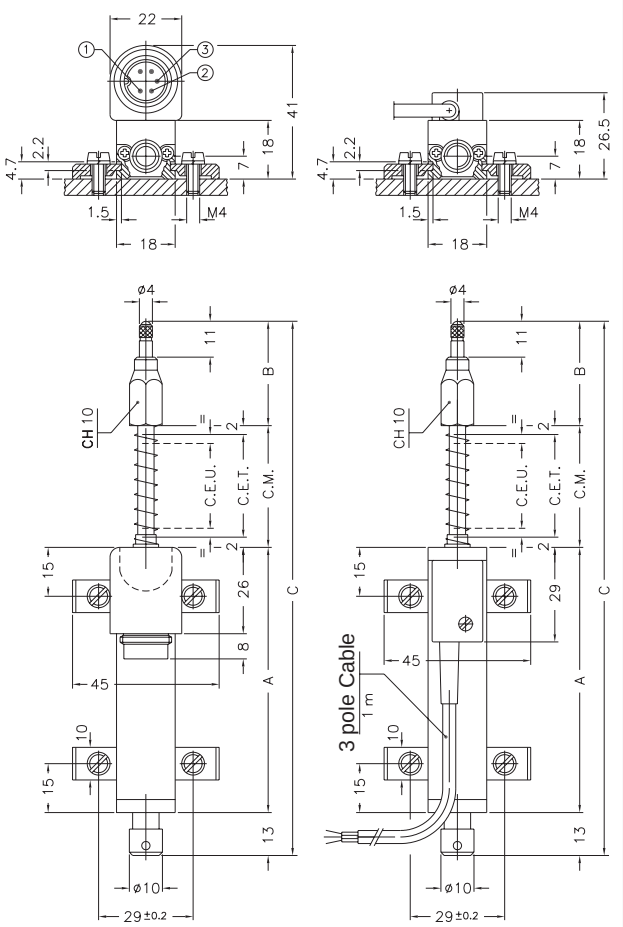

Important: all the data reported in the catalogue linearity, lifetime, temperature coefficient are valid for a sensor utilization as a ratiometric device with a max current across the cursor Ic ≤ 0.1 µA.

MECHANICAL / ELECTRICAL DATA

MODEL		10	25	50	75	100
Useful electrical stroke (C.E.U.) +1/-0	mm	10	25	50	76	101
Theoretical electrical stroke (C.E.T.) ±1	mm	C.E.U. + 1			76	101
Resistance (C.E.T.)	kΩ	1	1	5	5	5
Independent linearity (within C.E.U.)	± %	0,3	0,2	0,1	0,1	0,1
Dissipation at 40° (0W at 120°C)	W	0,2	0,6	1,2	1,8	2,4
Maximum applicable voltage	V	14	25	60	60	60
Mechanical stroke (C.M.)	mm	C.E.U. + 5				
Case length (A)	mm	C.E.U. + 38				
Tip length (B)	mm	32	32	40	40	40
Total length (C)	mm	108	138	196	246	296

ELECTRICAL CONNECTIONS

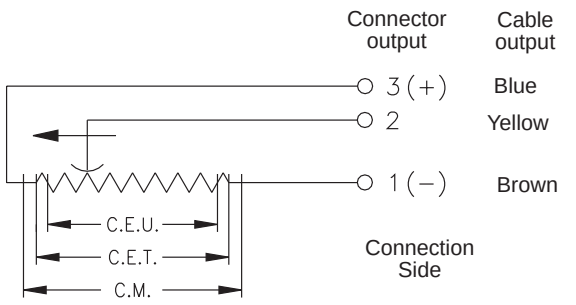

INSTALLATION INSTRUCTIONS

- Respect the indicated electrical connections (DO NOT use the transducer as a variable resistance)
- When calibrating the transducer, be careful to set the stroke so that the output does not drop below 1% or rise beyond 99% of the supply voltage.

ORDER CODE

Displacement transducer **PY2** [ ] [ ] [S] [ ] [M] [ ] [0] [0] [0] [X] [0] [0] [0] [X] [0] [ ]

3 pole PVC cable output 3x0.25 1m.	**F**
5 pole connector output DIN 43322	**C**

Model

Cable length (in metres)

This part of the code only applies to the model with cable output PA1-F

No certificate attached	**0**
Linearity curve to be attached	**L**

Color of plastic heads (green)	**0**
Color of plastic heads (black)	**N**

Ex.:**PY2 - C - 100**
Displacement transducer model PY2, 5-pole connector output, useful electrical stroke (C.E.U.) 100mm.

ACCESSORIES

STANDARD ACCESSORIES

Fixing kit for PA1: 4 brackets, M4x10 screws, washer	**PKIT005**
Tip with bal	**PTAS000**

OPTIONAL ACCESSORIES

5-pin axial female PCB connector DIN43322 IP40 clamp for wire ø4 - ø6 mm	**CON011**
5-pin axial female PCB connector DIN43322 IP65 clamp PG7 for wire ø4 - ø6 mm	**CON012**
5-pin 90° radial female PCB connector DIN43322 IP40 clamp for wire ø4 - ø6 mm	**CON013**

GEFRAN spa reserves the right to make any kind of design or functional modification at any moment without prior notice

GEFRAN spa
via Sebina, 74
25050 PROVAGLIO D'ISEO (BS) - ITALIA
tel. 0309888.1 - fax. 0309839063
Internet: http://www.gefran.com

GEFRAN