Autonics

Motor Driver(5-Phase micro stepping)

MD5-MF14

M A N U A L

Thank you very much for selecting Autonics products.

For your safety, please read the following before using.

■ Caution for your safety

※Please keep these instructions and review them before using this unit.

※Please observe the cautions that follow;

⚠ **Warning** Serious injury may result if instructions are not followed.

⚠ **Caution** Product may be damaged, or injury may result if instructions are not followed.

※The following is an explanation of the symbols used in the operation manual.
⚠ caution:Injury or danger may occur under special conditions.

⚠ Warning

1. **In case of using this unit with machineries(Nuclear power control, medical equipment, vehicle, train, airplane, combustion apparatus, entertainment or safety device etc), it requires installing fail-safe device, or contact us for information on type required.**
   It may cause serious human injury or a fire, property.
2. **Installation, connection, operation, control, maintenance should be carried out by person who has been qualified.**
   It may cause a fire or human injury, give electronic shock.
3. **When install this unit, it has to be a good earth ground itself and grounding wire should be over than AWG No.16(1.25mm²).**
   It may give electronic shock.
4. **Please install this unit after considering count plan against power failure.**
   It may cause human injury or damage to product by releasing holding torque of motor.
5. **Do not use this unit outdoors or place where there are flammable, corrosive gas, water, big vibration etc.**
   It may cause a fire or give electronic shock.
6. **Do no touch this unit or connection terminal of condenser within 30sec after turn off the power.**
   It may give electric shock by residual current.
7. **Do not put finger or any object in to this product.**
   It may cause a fire or give electronic shock.
8. **Do not disassemble and modify this unit, when it requires, please contact us.**
   It may cause a fire or give electronic shock, damage to product.
9. **Please adjust the volume switch with insulated screw driver.**
   It may give electronic shock.

⚠ Caution

1. **Do not move, install or maintain during it is operating.**
   It may give electronic shock.
2. **Power input voltage must be used within rating specification and power line should be over than AWG NO. 18(0.75mm²).**
   It may cause a fire or give electronic shock.
3. **Please check the connection before power.**
   It may cause a fire or give electronic shock, damage to product.
4. **When you connect to power, please install current breaker.**
   It may cause a fire.
5. **Please turn off when power failure occurred.**
   It may cause human injury or damage to product due to sudden movement when recover power failure.
6. **Please supply power after checking control input signal.**
   It may cause a burn due to high temperature in surface.
7. **The emergency stop needed during operating.**
   It may cause human injury or damage to product.
8. **Please apply power after checking control input signal.**
   It may cause human injury or damage to product by sudden movement.
9. **Do not turn on the HOLD OFF signal input while it is maintaining vertical position.**
   It may cause human injury or damage to product by releasing holding torque of motor.
10. **Please install a safety device when need to remain the vertical position after turn off the power.**
    It may cause human injury or damage to product by releasing holding torque of motor.
11. **Please check if HOLD OFF signal input is ON when need to set the output manually.**
    It may cause human injury by sudden movement.
12. **Please stop this unit when mechanical trouble occurred.**
    It may cause a fire or human injury.
13. **Do not touch the terminal when test check pressure or insulation resistance.**
    It may give electronic shock.
14. **Please observe rating specification.**
    It may cause human injury or give electronic shock, damage to product.
15. **In cleaning the unit, do not use water or an oil-based detergent.**
    It may cause a fire or give electronic shock.
16. **Please separate as industrial scrapped material when disuse this unit.**

※**The above specification is anytime changeable without notice.**

■ Specifications

Model		MD5-MF14
Power supply		100-240VAC 50/60Hz
Allowable voltage range		90 to 110% of rated voltage
Power consumption		4A(Max.)
Drive current		1.4A/Phase(Max.)
Step angle		Micro step(1, 2, 4, 5, 8, 10, 16, 20, 40, 80 division)
Input pulse spec.	Pulse width	Min. 0.5㎲
	Pulse interval	
	Rising/falling time	Max. 1㎲
	Pulse input voltage	[H] 4-8VDC, [L] 0-0.5VDC
	Max. input pulse frequency	500kpps
Ambient temperature		0 ~ 40℃
Ambient humidity		35 ~ 85%RH
Weight		Approx. 750g

■ Dimensions

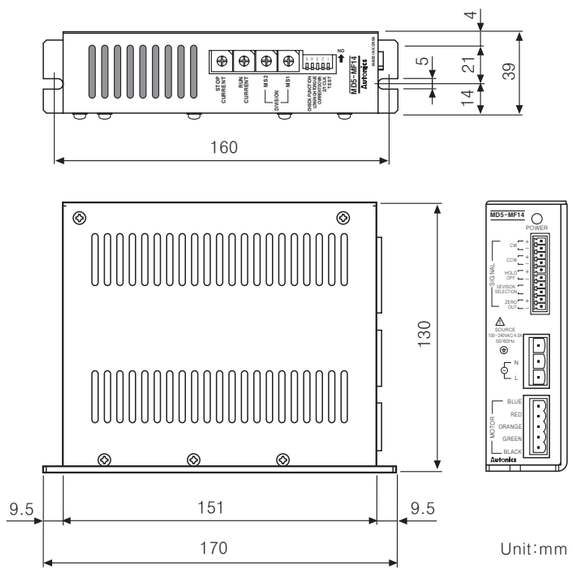

■ Time chart

●1 pulse input method

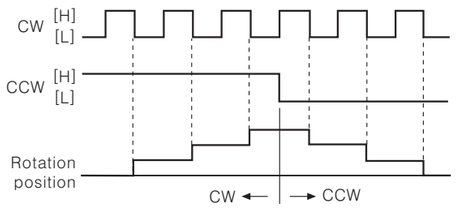

●2 pulse input method

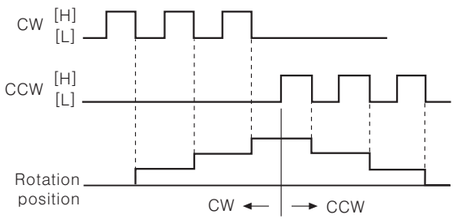

■ Input • Output diagram

<MD5-MF14 Driver inner>

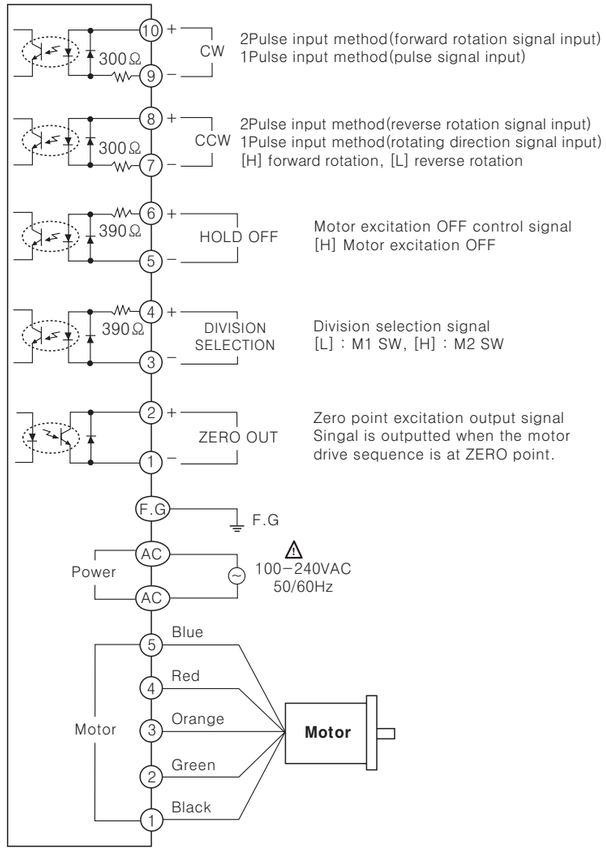

■ Setting resolution

S/W NO	0	1	2	3	4	5	6	7	8	9
Resolution	1	2	4	5	8	10	20	40	80	10

MS1 MS2 5-Phase motor rotation angle = $\frac{\text{Basic step}(0.72^\circ)}{\text{Resolution}}$

※The adjustment of division during stepping motor operation may cause malfunction.

※Allows a double micro-step operation with the division selecting signal.

※Please refer to the below formula of zero point excitation output signal.

$$\text{Cycle of zero point excitation output signal [s]} = \frac{1}{\text{Input frequency[Hz]}} \times 10 \times \text{Resolution}$$

■ Setting RUN and STOP Current

<RUN CURRENT>

S/W No	0	1	2	3	4	5	6	7	8	9	A	B	C	D	E	F
Current (A)	0.5	0.58	0.66	0.75	0.81	0.88	0.96	1.03	1.1	1.15	1.25	1.3	1.4	1.47	1.53	1.6

※The run current is phase current for 5 phase stepping motor.

<STOP CURRENT>

S/W No	0	1	2	3	4	5	6	7	8	9	A	B	C	D	E	F
%	27	31	36	40	45	50	54	58	62	66	70	74	78	82	86	90

※The switch setting value of STOP CURRENT is a percentage of the RUN CURRENT S/W setting current value. Please refer to the below the maintaining torque when the motor stopped.

$$\text{Maintaining torque [kgf • cm]} = \frac{\text{Max. holding torque[kgf • cm]} \times \text{Stopping current[A]}}{\text{Rated motor current[A]}}$$

■ S/W with selection of function

No	Name	Function	S/W position	
			ON	OFF
1	TEST	Self diagnosis function	100pps rotation	Normal
2	2/1 CLK	Pulse input method	1Pulse input	2Pulse input
3	CURRENT DOWN	Auto CURRENT DOWN	Not use	Use
4	LOW/HIGH TORQUE	Drive voltage conversion	High speed torque	Normal
5	CHECK FUNCTION	Check internal function	When it is used, OFF	

※Self-diagnosis : The self-diagnosis outputs a pulse of 100pps during the S/W[ON] setting to test the motor and driver.

※Auto CURRENT DOWN function : The Auto CURRENT DOWN reduces the drive current at a constant rate to minimize heating when stopping the motor

※Drive voltage conversion function(LOW/HIGH Torque) : The functions is to increase the high speed torque of motor by changing drive voltage of motor.

※Check internal function : It must be set as OFF, because all kinds of function of driver is stopped when S/W is set as ON.

■ Caution for using

1. Caution for signal input
   ①When using the 2 pulse input method, do not input CW and CCW at the same time. It may cause malfunction.
   ②In case, the signal input supply is higher than rated supply expressed on the specification, please connect the additional resistance to external part.
2. Caution for setting the drive and stopping current
   ①A driver current must be set under a rated current of the motor because motor emits heat too much when a driver current is set over a rated current of the motor.
   ②A stopping current its driven by Auto CURRENT DOWN function when the motor HOLD OFF signal is [L]. In case, the motor HOLD OFF signal is [H], or Auto CURRENT DOWN function is nor set, a stopping current setting value is not apply to the motor.
3. Caution for wiring
   ①Use Twist pair(Over 0.2mm²) for the signal wire should be shorter than 2m.
   ②Please use an electric wire is thicker than the motor lead when product the motor wire connection.
   ③Please leave a space over 10cm between a signal wire connection and power wire.
4. Caution for installation
   ①Please mount a heating panel on metal surface closely.
   ②Please mount this product at well-ventilated place in order to increase the heating efficiency of heating panel.
5. Function S/W
   ①Check the position of self-diagnosis S/W before turn on the power. If turn on the power at the state of [ON], It could be dangerous due to abrupt motor starting.
   ②When the selection switch of input signal method is changed to 2 Pulse input method during the operation with 1 Pulse input method, it may be danger as the revolution way of the motor is changed conversely. Please do not change the input signal method during the operation.
6. Installation environment
   ①It shall be used indoor
   ②Altitude Max. 2000m
   ③Pollution Degree 2
   ④Installation Category Ⅱ

※**It may cause malfunction if above instructions are not followed.**

■ Main products

- ■ COUNTER
- ■ TIMER
- ■ TEMPERATURE CONTROLLER
- ■ PANEL METER
- ■ TACHO/LINE SPEED/ PULSE METER
- ■ DISPLAY UNIT
- ■ PROXIMITY SENSOR
- ■ PHOTOELECTRIC SENSOR
- ■ FIBER OPTIC SENSOR
- ■ PRESSURE SENSOR
- ■ ROTARY ENCODER
- ■ SENSOR CONTROLLER
- ■ POWER CONTROLLER
- ■ STEPPING MOTOR & DRIVER & CONTROLLER
- ■ LASER MARKING SYSTEM(CO_2, Nd:YAG)

Autonics Corporation
http://www.autonics.com

Satisfiable Partner For Factory Automation

■**HEADQUARTERS** :
41-5, Yongdang-ri, Ungsang-eup, Yangsan-si, Gyeongnam, 626-847, Korea
■**INTERNATIONAL SALES** :
Bldg. 402 3rd Fl., Bucheon Techno Park, 193, Yakdae-dong, Wonmi-gu, Bucheon-si, Gyeonggi-do, 420-734, Korea
TEL:82-32-610-2730 / FAX:82-32-329-0728
■**E-mail** : sales@autonics.net

EP-KE-14-0003E