Small diffuse reflective and convergent reflective type photoelectric sensor

▣Features

- Easy installation by compact size.
- Superior detection not affected by color of target. (Limited distance reflective type)
- Operation indicator is located on the top. (BYD30-DDT-U, BYD50-DDT-U)
- Easy to adjust the response time via Timer function. (OFF Delay time : 0.1 ~ 2sec variable)
- Built-in overcurrent protection circuit / Reverse power polarity protection circuit.

⚠ **Please read "Caution for your safety" in operation manual before using.**

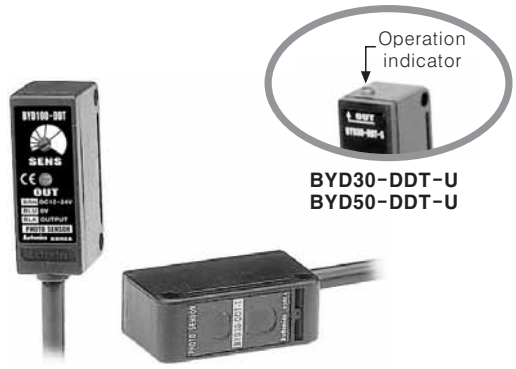

▣Specifications

Model	BYD30-DDT BYD30-DDT-U(★1) BYD30-DDT-T(★2)	BYD50-DDT BYD50-DDT-U(★1) BYD50-DDT-T(★2)	BYD100-DDT	BYD3M-TDT	BYD3M-TDT-P
Sensing type	Convergent reflective		Diffuse reflective	Transmitted beam	
Sensing distance	(★3) 10 ~ 30mm	(★3) 10 ~ 50mm	(★3) 100mm	3m	
Sensing target	Transparent, Translucent, Opaque materials			Opaque materials of Min. ϕ6mm	
Hysteresis	Max. 10% at rated setting distance		Max. 20% at rated setting distance	———	
Response time	Operation:Max. 3ms, Return:Max. 100ms (When the timer adjuster is minimum)		Operation:Max. 3ms Return:Max. 100ms	Max. 1ms	
Power supply	12-24VDC ±10%(Ripple P-P:Max. 10%)				
Current consumption	Max. 35mA			Max. 30mA	
Light source	Infrared LED(modulated)				
Sensitivity adjustment	Fixed		Adjuster	Fixed	
Operation mode	Light ON mode fixed			Dark ON(Light ON : Option)	
Control output	NPN open collector output ☞ Load voltage : Max. 30VDC, Load current : Max. 50mA, Residual voltage : Max. 1V			NPN open collector output ☞ Load voltage : Max. 30VDC, Load current : Max. 100mA, Residual voltage : Max. 1V	PNP open collector output ☞ Output voltage :Min. (Power supply-2.5)V, Load current : Max. 100mA
Protection circuit	Reverse polarity protection, Short-circuit protection				
Timer function	Built-in OFF delay Timer(Adjustable) <Delay time : Max. 0.1 ~ 2sec >		———		
Indication	Operation indicator : Red LED				
Connection	Outgoing cable(2m)				
Insulation resistance	Min. 20MΩ(at 500VDC mega)				
Noise strength	±240V the square wave noise(pulse width:1μs) by the noise simulator				
Dielectric strength	1,000VAC 50/60Hz for 1minute				
Vibration	1.5mm amplitude at frequency of 10 ~ 55Hz in each of X, Y, Z directions for 2 hours				
Shock	500m/s² (50G) in X, Y, Z directions for 3 times				
Ambient illumination	Sunlight : Max. 11,000 ℓx, Incandescent lamp : Max. 3,000 ℓx				
Ambient temperature	-20 ~ +65℃(at non-freezing status), Storage : -25 ~ +70℃				
Ambient humidity	35 ~ 85%RH, Storage : 35 ~ 85%RH				
Protection	IP64(IEC standard) (Built-in timer type : IP50)		IP50 (IEC standard)	IP64(IEC standard)	
Material	Case : ABS, Lens : Acrylic				
Cable	3P, ϕ4mm, Length : 2m				
Accessory	Adjustment driver, Bracket A, Bolts, Nuts			Bracket A×2, Bolts, Nuts	
Approval	CE				
Unit weight	Approx. 70g				

※(★1) Operation indicator is on the top.
※(★2) OFF delay timer is built-in. (Delay time : Max. 0.1 ~ 2sec)
※(★3) Sensing distance for Non-glossy white paper(50×50mm).

■Feature data

●Sensing distance(Convergent reflective/Diffuse reflective type)

Measuring method	BYD30-DDT / BYD30-DDT-T	BYD50-DDT / BYD50-DDT-T	BYD100-DDT
Standard sensing target : Non-glossy white paper 50×50mm 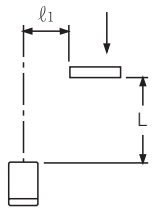	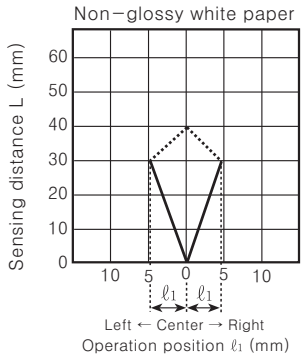	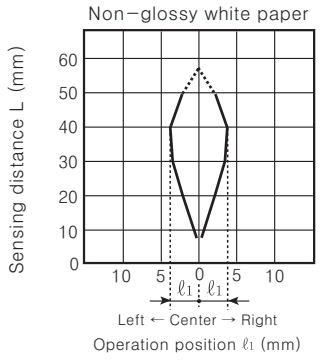	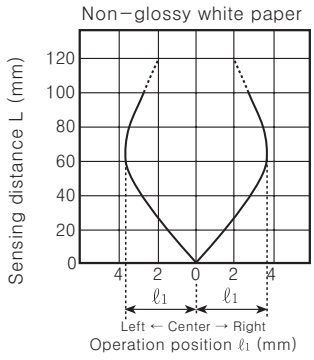

●Parallel shifting(Transmitted beam)

Measuring method	BYD3M-TDT	BYD3M-TDT(SLIT)
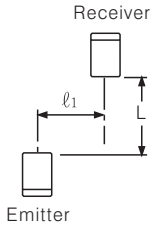	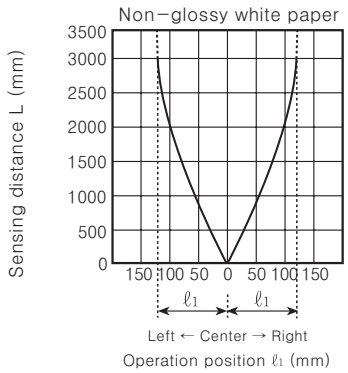	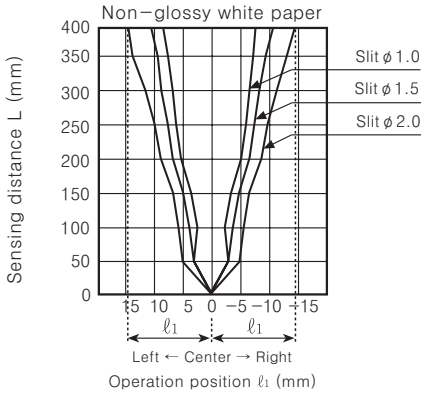

※Above characteristic is from 400mm sensing distance to install transmitted beam type slit(ϕ1, ϕ1.5, ϕ2, ϕ2.5).

●Sensor angle(Transmitted beam)

Measuring method	BYD3M-TDT	BYD3M-TDT(SLIT)
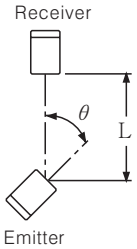	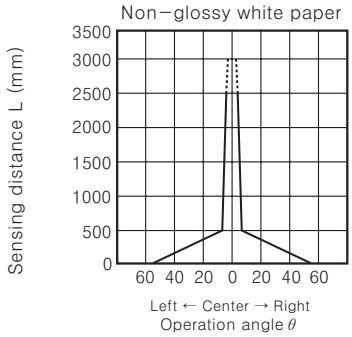	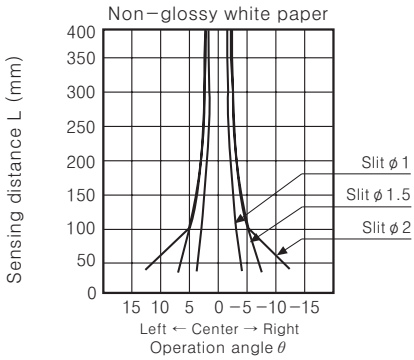

※Above characteristic is from 400mm sensing distance to install transmitted beam type slit(ϕ1, ϕ1.5, ϕ2, ϕ2.5).

■Sensing distance by color(Convergent reflective type)

BYD30-DDT(-U), BYD30-DDT-T	BYD50-DDT(-U), BYD50-DDT-T	
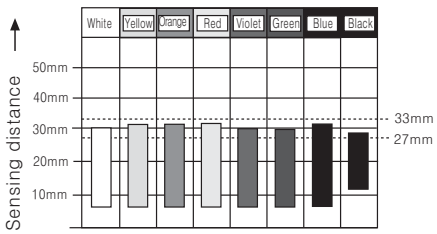	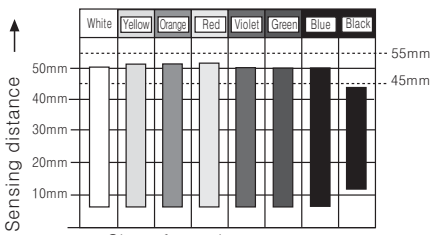	1)This mode is stable limited distance detection photoelectric sensor, therefore it is not affected by color or material within range of sensing distance as specified in chart. 2)It is able to detect target stably because of small effect from background.

※Size of sensing target : Non-glossy paper 50×50mm

▣Operation mode and timing diagram

●BYD30-DDT(-U), BYD50-DDT(-U), BYD100-DDT

Operation mode	Light ON mode
Receiver operation	ON / OFF
Operation indicator (LED)	ON / OFF
TR output	ON / OFF

●BYD30-DDT-T, BYD50-DDT-T

Operation mode	Light ON mode
Receiver operation	ON / OFF (Ta)
Operation indicator (LED)	ON / OFF (t, T, t, T)
TR output	ON / OFF

※T : Setting time by timer adjuster(0.1 ~ 2sec)
※t : Max. 3ms(When the Timer adjuster is minimum)
※If (Ta) is shorter than (T), TR output will be ON.

●BYD3M-TDT, BYD3M-TDT-P

Operation mode	Light ON mode	Dark ON mode
Receiver operation	ON / OFF	ON / OFF
Operation indicator (LED)	ON / OFF	ON / OFF
Output TR	ON / OFF	ON / OFF

※To prevent incorrect operation, output of units keeps the state of OFF for 0.5sec. after power ON.
※If the control output terminal is short-circuited or overcurrent condition is existed, the control output will turn off due to protection circuit.
※Light ON mode is sold separately.

▣Control output diagram

●BYD3M-TDT2

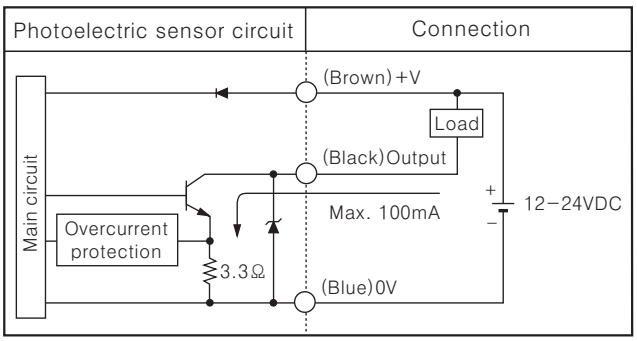

●BYD3M-TDT2-P

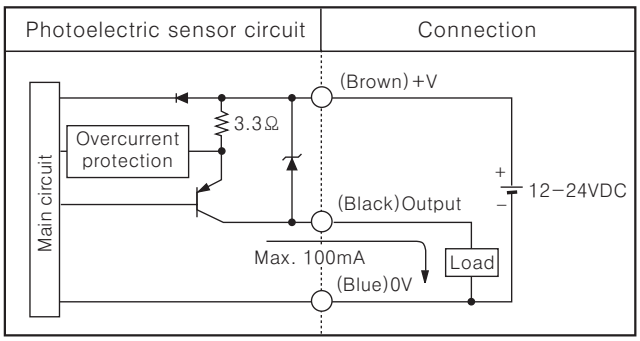

●BYD30-DDT(-U), BYD50-DDT(-U)
●BYD30-DDT-T, BYD50-DDT-T
●BYD100-DDT

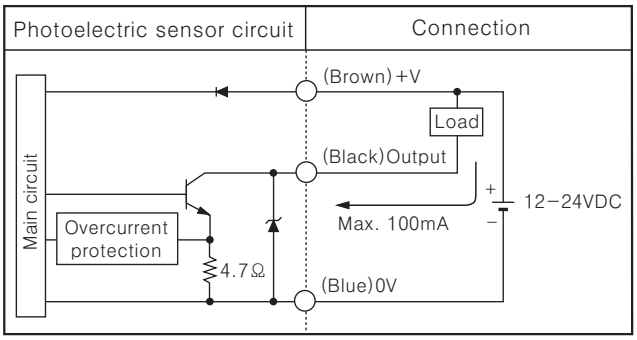

■Connections

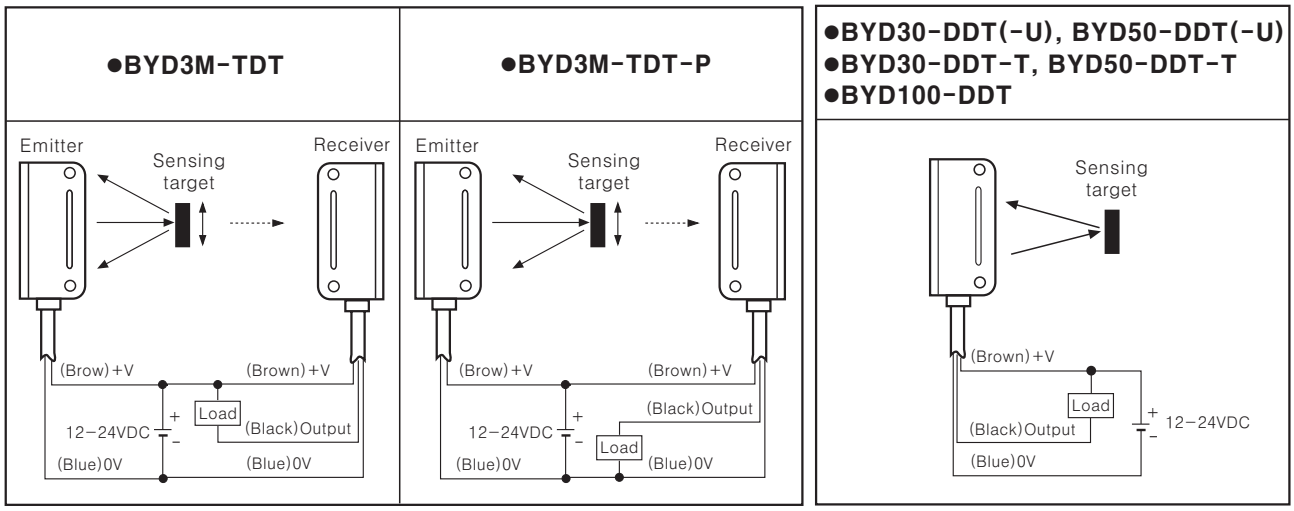

■Dimensions

(Unit:mm)

●Product

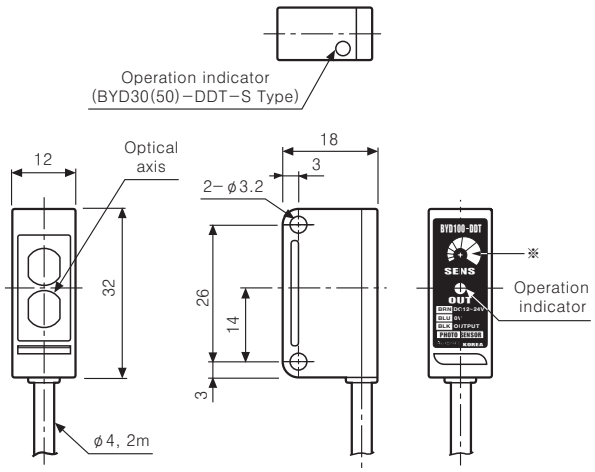

※Timer built-in type : Time adjuster,
Diffuse reflective type : Sensitivity Adjuster

●Bracket-A ●Bracket-B

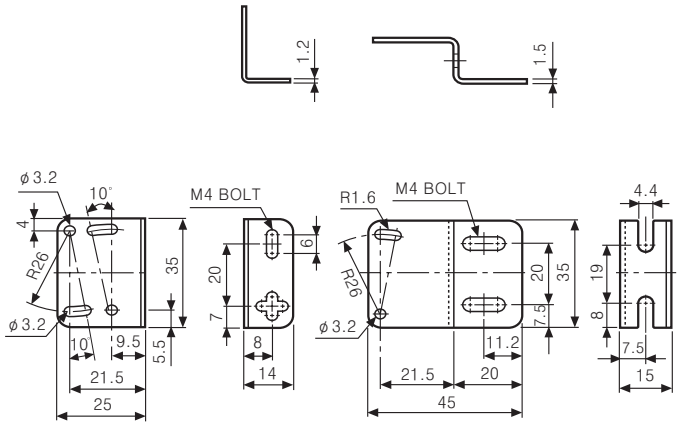

※Bracket-A is basic type, Bracket-B is sold separately.

●Bracket-A

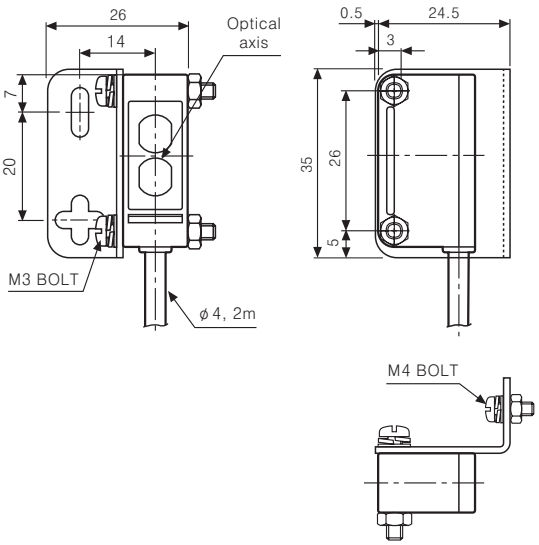

●Bracket-B

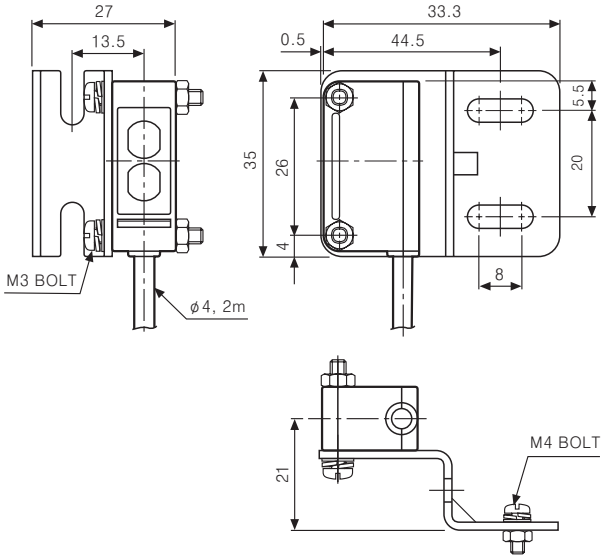

▣Mounting and sensitivity adjustment

◎Convergent reflective type

1. Supply the power to the sensor after install the sensor.

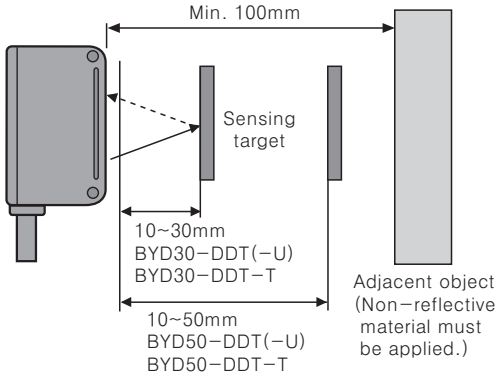

2. Install the target at sensing position and adjust the sensor to the right and the left or up and down to be at the right angle against optical axis and fix it at safe operating position.
   Keep the distance
   BYD30-DDT, (-T), (-U) : 10 ~ 30mm
   BYD50-DDT, (-T), (-U) : 10 ~ 50mm
   between photoelectric sensor and target.
3. Adjust the response time up to the optimum status in case of timer built-in type. Keep the distance min. 100mm between photoelectric sensor and object in background.
   It may cause malfunction by reflection light from the other target.

※The sensing distance indicated in the specification chart is that of non-glossy white paper in the target size 50×50mm. The sensing distance may be changed by the size of the target, reflectance of the target.

◎Transmitted beam type

1. Supply the power to the photoelectric sensor, after set the emitter and the receiver facing each other.
2. Set the receiver in the middle of the operation range of indicator adjusting the receiver and the emitter right and left, up and down.
3. Adjust up and down direction as the same.
4. After adjustment, check the stability of operation putting the object at the optical axis.

※If the sensing target is translucent body or smaller than ϕ6mm, it can be missed by sensor because light penetrate it.

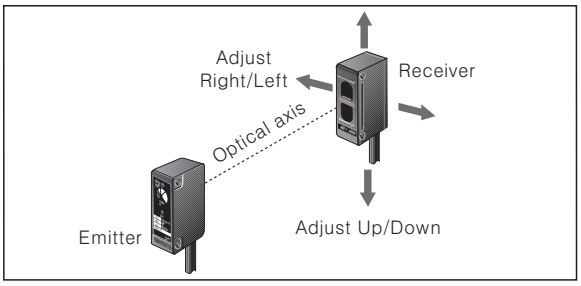

◎Diffuse reflective type

1. The sensitivity should be adjusted depending on a sensing target or mounting side.
2. Set the target at a position to be detected by the beam, then turn the adjuster until position ⓐ in the operation range of indicator from min. position of the adjuster.
3. Take the target out of the sensing area, then turn the adjuster until position ⓑ where the indicator turns on. If the indicator does not turn on, Max. position is position ⓑ.
4. Set the adjuster at the center of two switching position ⓐ, ⓑ.

※The sensing distance indicated on specification chart is for 50×50mm of non-glossy white paper. Be sure that it can be different by size, surface and gloss of target.

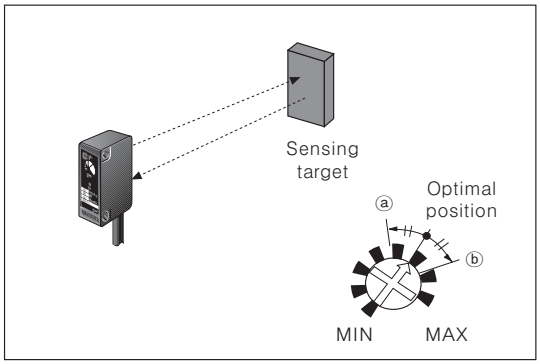

▣Accessory(Sold separately)

●Slit(Model name : BYD3M-Slit)

ϕ2.5 ϕ2.0 ϕ1.5 ϕ1.0

●Min. sensing target and Max. sensing distance by slit ϕ
-Attach the slit on receiver and emitter together.

SLIT ϕ	Min. sensing target	Max. sensing distance
ϕ1.0	Opaque materials of Min. ϕ0.8	500mm
ϕ1.5	Opaque materials of Min. ϕ1.5	700mm
ϕ2.0	Opaque materials of Min. ϕ2.0	1200mm

※This slit is for BYD3M-TDT(-P) only.
※2 pieces of each different ϕ and total 8 pieces packed.
※This slit is sticker for attachment, please remove the dirt on lens of photoelectric sensor before using it.